AMERICAN CRANE
& EQUIPMENT CORPORATION
ACECO
DOUGLASSVILLE, PA. 19518 U.S.A.
PHONE: 610-385-6061
FAX: 610-385-3191

3131
TOP RUNNING TROLLEY

15 TON CAPACITY

PRODUCT INFORMATION

DWG. NO: 3131B-1426

DATE: 01.11.00 | REVISION: 0

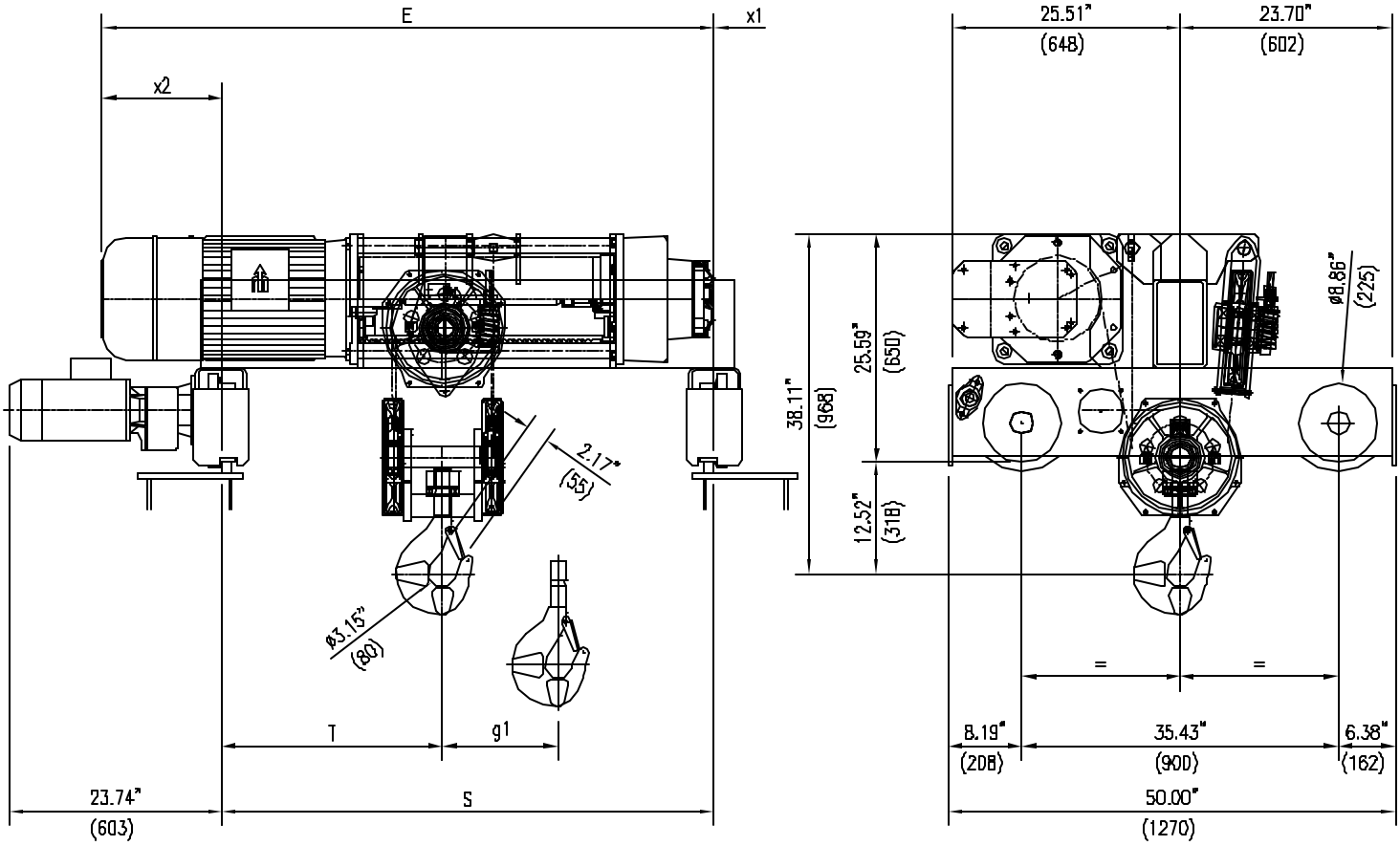

ACECO RESERVES THE RIGHT TO MAKE CHANGES WITHOUT NOTICE.

HOIST TECHNICAL DATA

CAPACITY:	15 TONS (30000 LBS)	HOIST CLASS:	HMI H4	HOIST MOTOR:	21.5/6.7 HP, 1800/600 RPM, TEFC, S3 - 30%, CLASS "F" INSULATION
HOIST SPEED:	17 / 6 F.P.M (OPT. SPEEDS AVAILABLE)	POWER SUPPLY:	460V-3PH-60HZ		
		HOIST MOTOR:	6275-62A	TROLLEY MOTOR:	1.2/.3 HP, 3600/900 RPM, TEFC, S3 - 60%, CLASS "F" INSULATION
TROLLEY SPEED:	75 / 17 F.P.M (OPT. SPEEDS AVAILABLE)	TROLLEY MOTOR:	9100-1355R08G		

DIMENSIONAL INFORMATION

HOIST TYPE	HEIGHT OF LIFT		S	T	E	g1	x1	x2	WEIGHT
	METERS	FEET	INCHES (mm)	INCHES (mm)	INCHES (mm)	INCHES (mm)	INCHES (mm)	INCHES (mm)	LBS (KG)
3131B-1426	8.0	26'-3"	55.11 (1400)	24.72 (628)	69.05 (1754)	5.71 (145)	0 (0)	13.94 (354)	3087 (1400)
3131B-2426	11.0	36'-1"	55.11 (1400)	23.62 (600)	77.72 (1974)	7.87 (200)	4.72 (120)	17.87 (454)	3197 (1450)
3131B-3426	15.1	49'-6"	82.68 (2100)	35.91 (912)	89.53 (2274)	10.83 (275)	-1.38 (-35)	8.23 (209)	3616 (1640)
3131B-4426	21.3	69'-10"	82.68 (2100)	33.70 (856)	107.24 (2724)	15.24 (387)	11.02 (280)	13.54 (344)	3759 (1705)